TENI

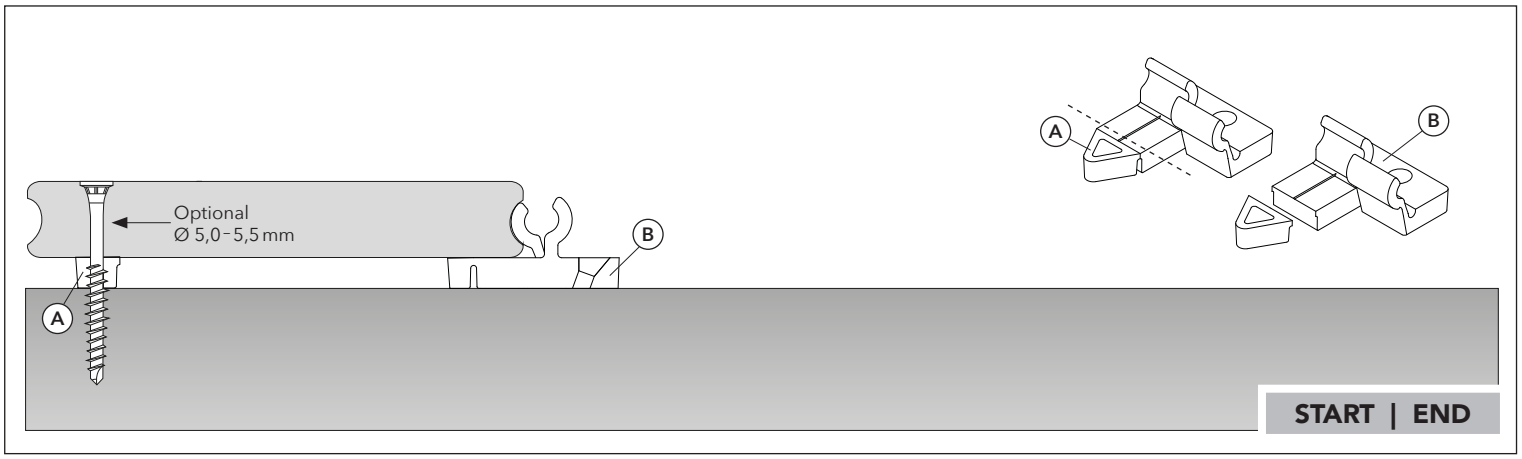

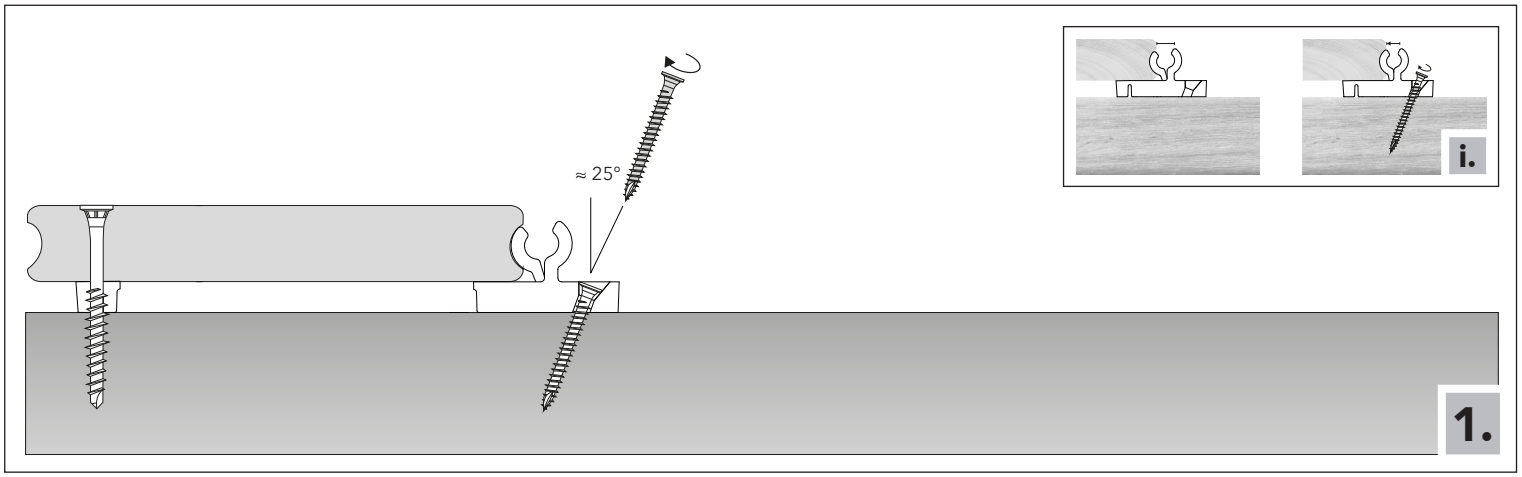

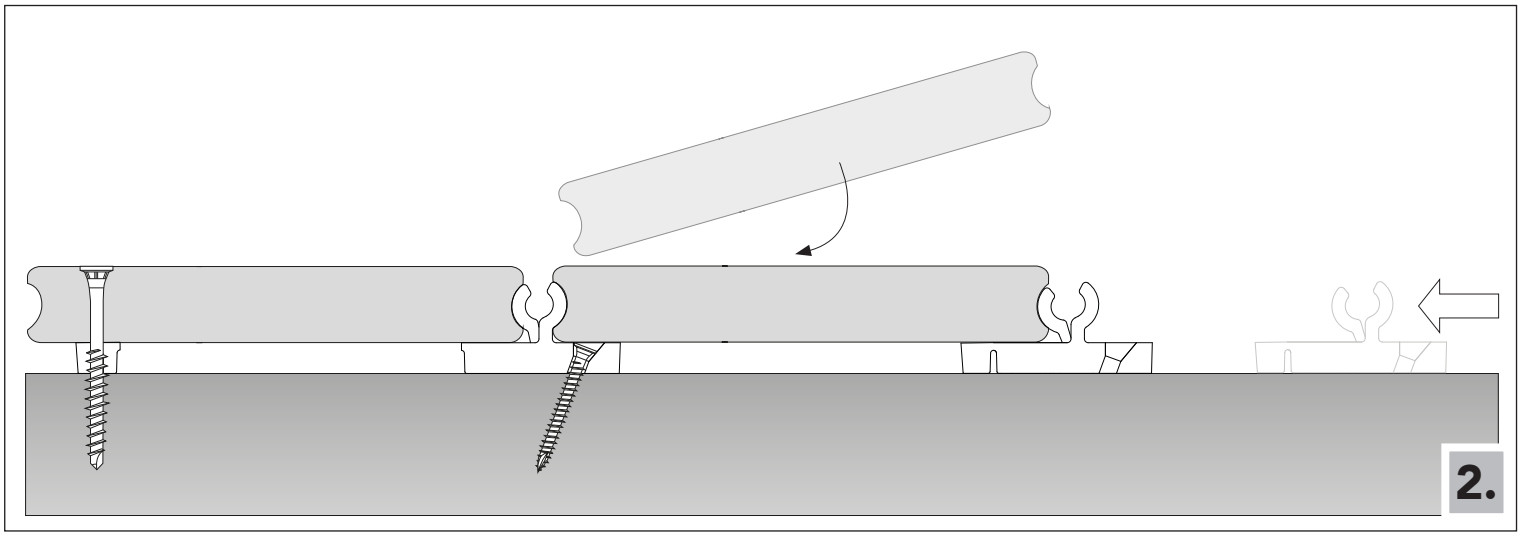

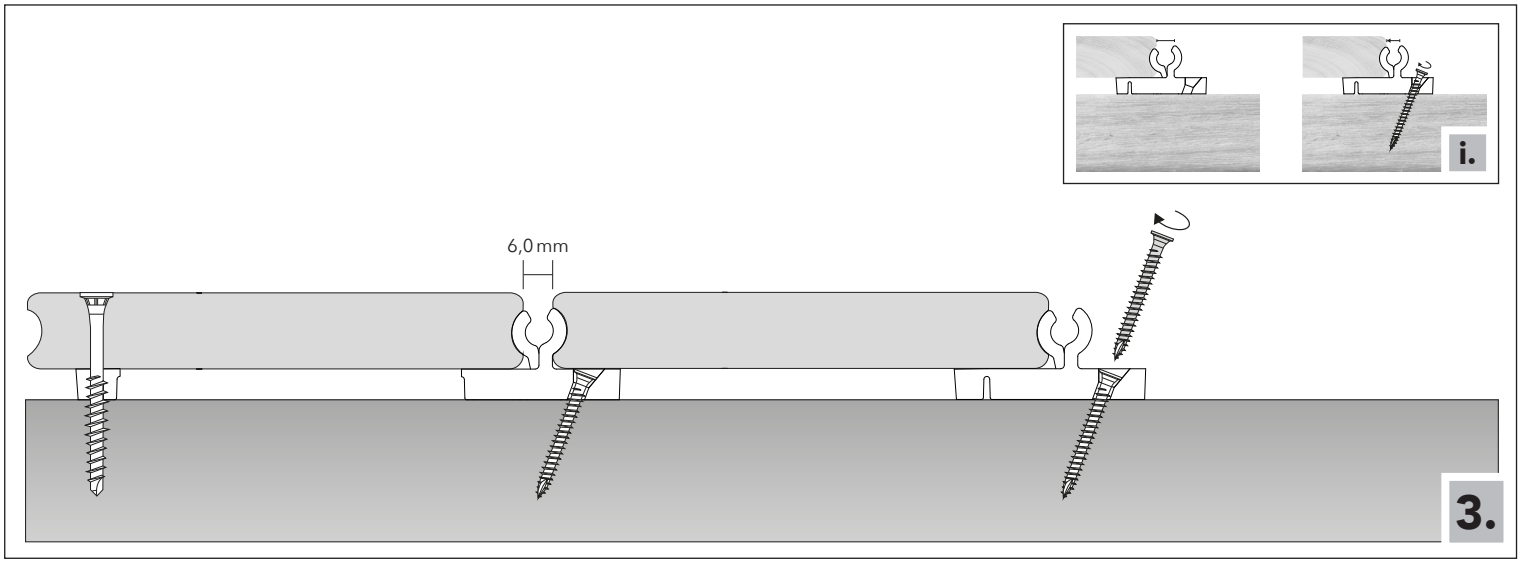

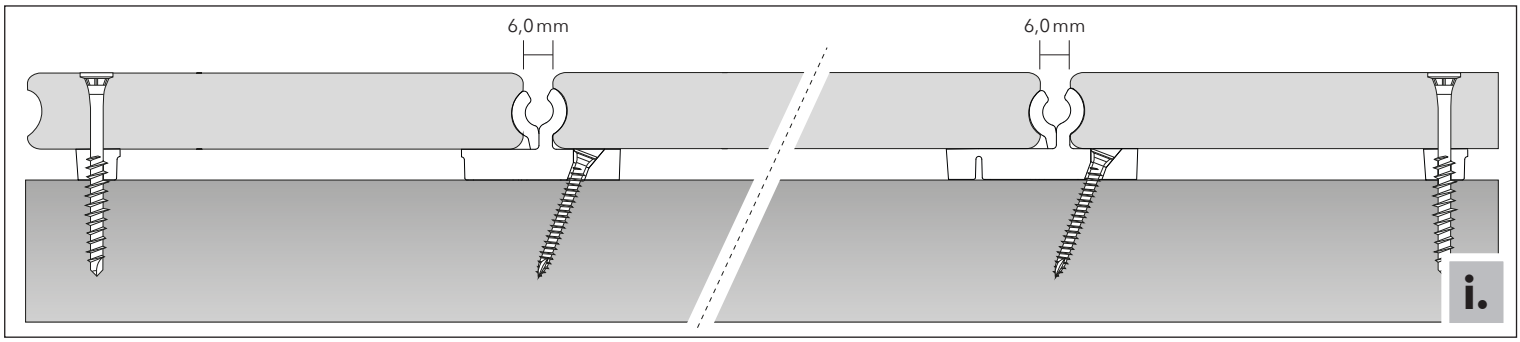
6,0 mm
6,0 mm
i.

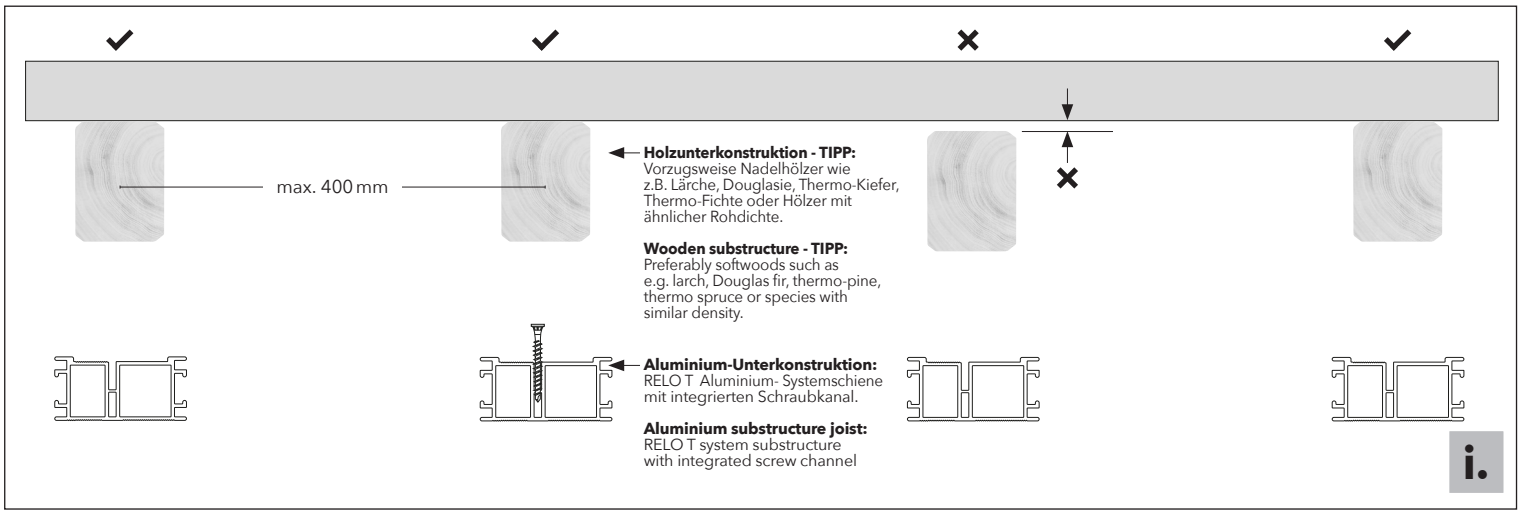
max. 400 mm
Holzunterkonstruktion - TIPP:
Vorzugsweise Nadelhölzer wie z.B. Lärche, Douglasie, Thermo-Kiefer, Thermo-Fichte oder Hölzer mit ähnlicher Rohdichte.
Wooden substructure - TIPP:
Preferably softwoods such as e.g. larch, Douglas fir, thermo-pine, thermo spruce or species with similar density.
Aluminium-Unterkonstruktion:
RELO T Aluminium- Systemschiene mit integrierten Schraubkanal.
Aluminium substructure joist:
RELO T system substructure with integrated screw channel
i.

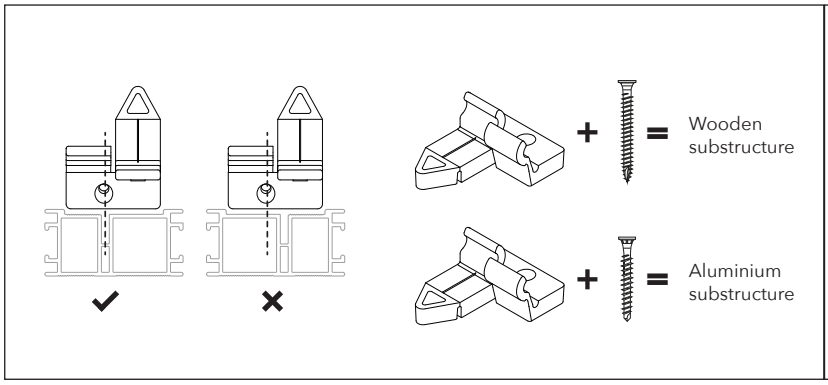
Wooden substructure
Aluminium substructure

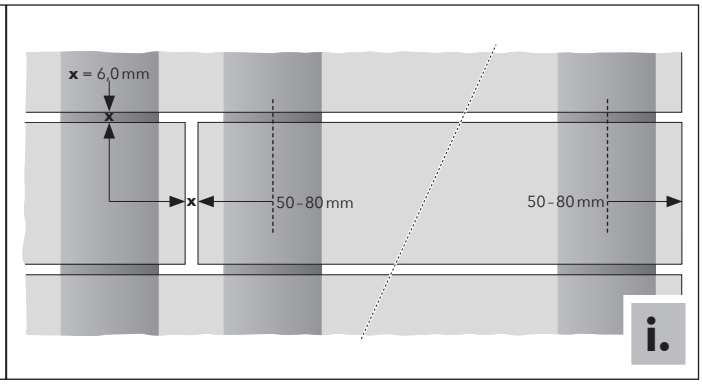
x = 6,0 mm
x
50 - 80 mm
50 - 80 mm
i.

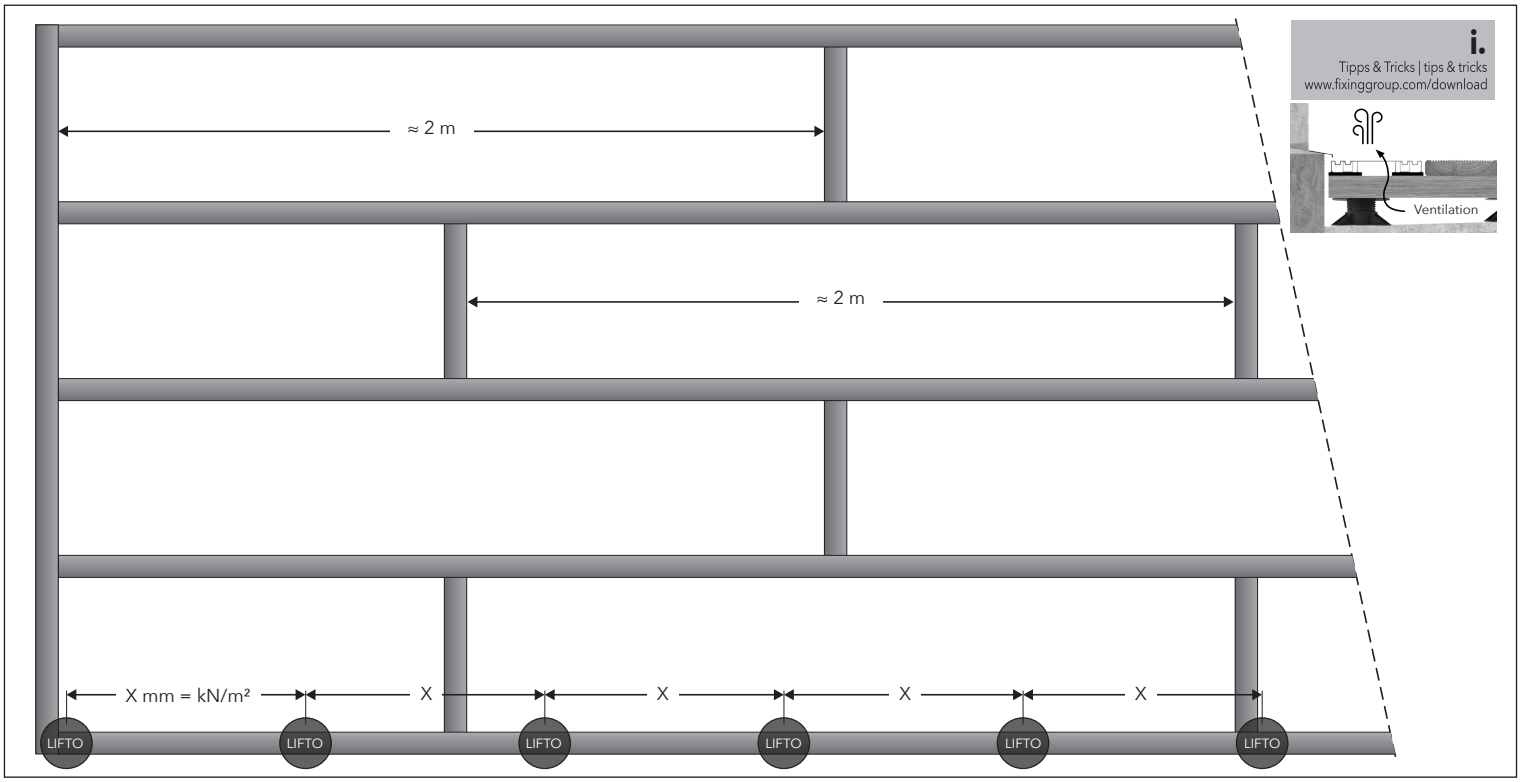
≈ 2 m
≈ 2 m
X mm = kN/m²
X
X
X
X
LIFTO
LIFTO
LIFTO
LIFTO
LIFTO
LIFTO
i.
Tipps & Tricks | tips & tricks
www.fixinggroup.com/download
Ventilation